CORA BOOSTER

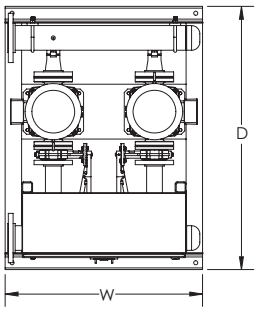

TOP

GEMINI BOOSTER

PACKAGE DIMENSIONS (IN)

W: 34"

D: 48"

H: 66"

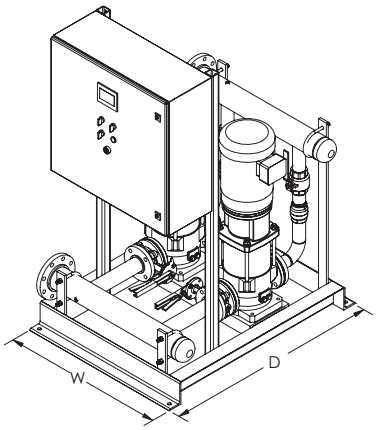

LOCATE SYSTEM CONNECTIONS

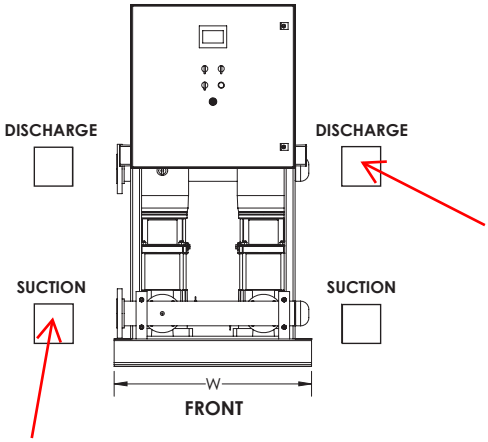

FRONT

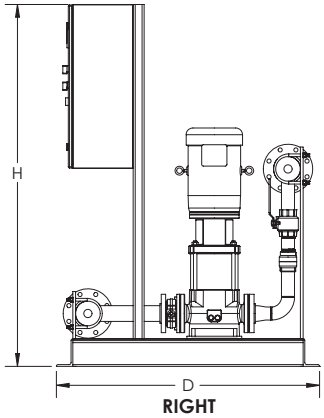

RIGHT

Title:		Customer:		Project:
Drawn By:	Date:	Checked By:	Date:	Mechanical Sales Inc. 521 S. Brandon Seattle, Washington 98109
Scale: NONE	Revision: 2	Sheet:	Job No.:	
Projection Method: **THIRD ANGLE**	Sheet Size: B	**Unless Otherwise Stated:** Linear Tol.: **±0.0625** All Dimensions: Inches		

This drawing and any information or descriptive material set out on it are the confidential and copyright property of Mechanical Sales Inc. © and MUST NOT BE DISCLOSED, COPIED, LOANED in whole or part or used for any purpose without the written permission of Mechanical Sales Inc.